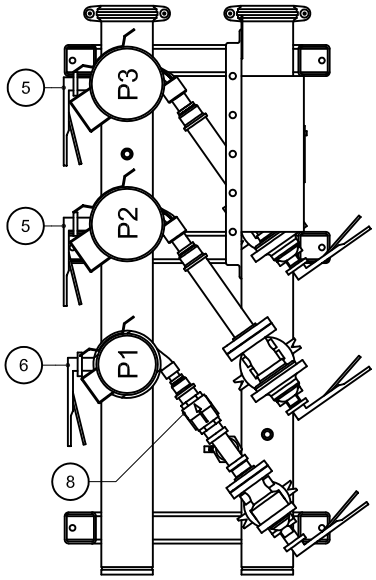

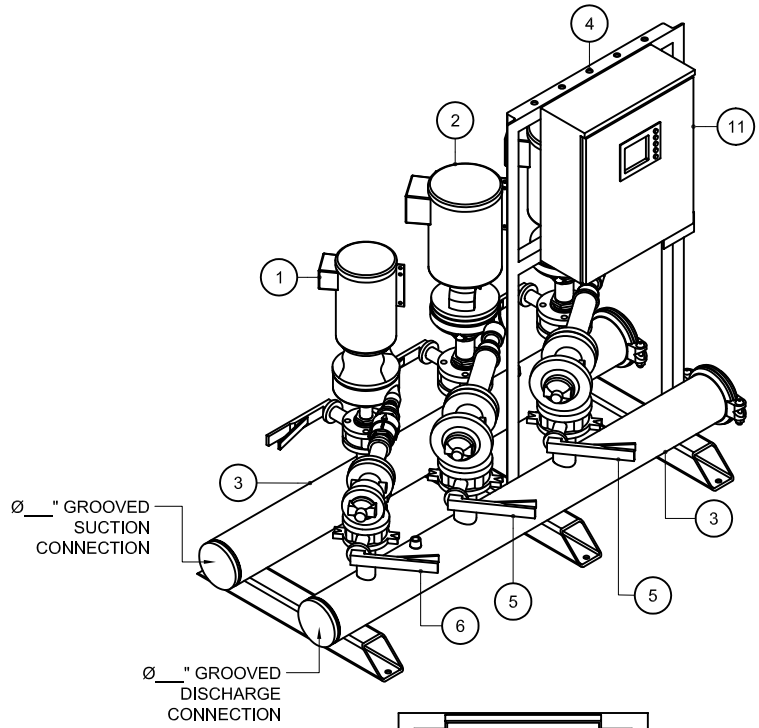

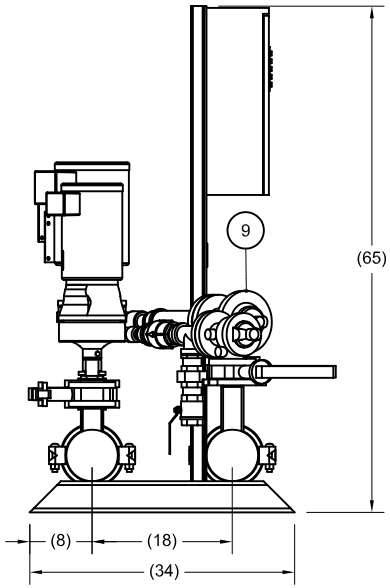

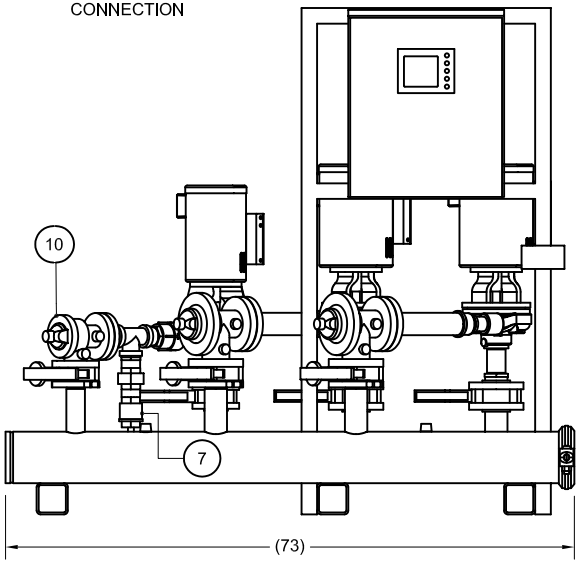

NOTES:

1. FINISH: **ORANGE, ENAMEL PAINT.**
2. CONDITION POINT:
   SUCTION PRESSURE:
3. ALL DIMENSIONS ARE SUBJECT TO CHANGE WITHOUT NOTICE: DO NOT USE FOR CONSTRUCTION PURPOSES UNLESS CERTIFIED.

CONT.

4. (XX) INDICATE REFERENCE DIMENSIONS.
5. PIPE SUPPORTS NOT SHOWN FOR CLARITY.
6. ALL WELDING DONE BY ASME CODE SECTION 9 CERTIFIED WELDERS.
7. FILL BASE WITH NON-SHRINKING, NON-FERROUS GROUT: FAILURE TO DO VOIDS TIGERFLOW WARRANTY.

REV	DESCRIPTION	DWN	CHK	DATE

SYM	QTY	PART
11	1	CONTROL PANEL, MARK II, E-SERIES
10	1	VALVE, PRV/CK, AP, FLANGE 125# CI, STD -
9	2	VALVE, PRV/CK, AP, FLANGE 125# CI -
8	1	VAL, CHECK, BRS, SPRINGLOADED, THRD, 600 -
7	1	VAL, BALL, FULL PORT, BRS, FBV-3, THD -
6	2	VAL, B/FLY, LEVER HND -
5	4	VAL, B/FLY, LEVER HNDL -
4	1	ASSEMBLY, PANEL STAND
3	1	S/S S&D HEADERS
2	2	PUMP,
1	1	PUMP,

Parts List

TIGERFLOW®
Engineered Systems to the World

4034 MINT WAY
DALLAS, TX 75237
PHONE: (800) 783-6756
FAX: (214) 333-2742
E-MAIL: engineering@tigerflow.com
WEB SITE: www.tigerflow.com

THIS DOCUMENT CONTAINS INFORMATION THAT IS CONFIDENTIAL AND PROPRIETARY TO TIGERFLOW SYSTEMS, INC. ("TIGERFLOW"). THIS DOCUMENT IS FURNISHED WITH THE UNDERSTANDING THAT THE DOCUMENT AND THE INFORMATION IT CONTAINS WILL NOT BE COPIED OR DISCLOSED TO OTHERS EXCEPT WITH THE WRITTEN CONSENT OF TIGERFLOW, WILL NOT BE USED EXCEPT FOR THE BENEFIT OF TIGERFLOW AND WILL BE RETURNED AND ALL FURTHER USE DISCONTINUED UPON REQUEST FROM TIGERFLOW.

✓ SUBMITTAL DRAWING

-ALL DIMENSIONS ARE REFERENCE ONLY
-DO NOT SCALE DRAWING

☐ MANUFACTURING DRAWING

-LINEAR TOLERANCE ±1/8"
-ANGULAR TOLERANCE ±5°

-DO NOT SCALE DRAWING
-DIMENSIONS ARE IN INCHES
-DIMENSIONING PER ASME Y14.5-1994

THIRD ANGLE PROJECTION

SCALE: NTS

DSN | DATE
CHK | DATE
PRODUCTION #
PROJECT NAME
NAME: TRIPLEX LEAD/LAG W/PRV AND TANK FEED
MODEL KEY
DRAWING #
REV: 0